## S/S DETERGENT CABINET MOD: KP-SSDC

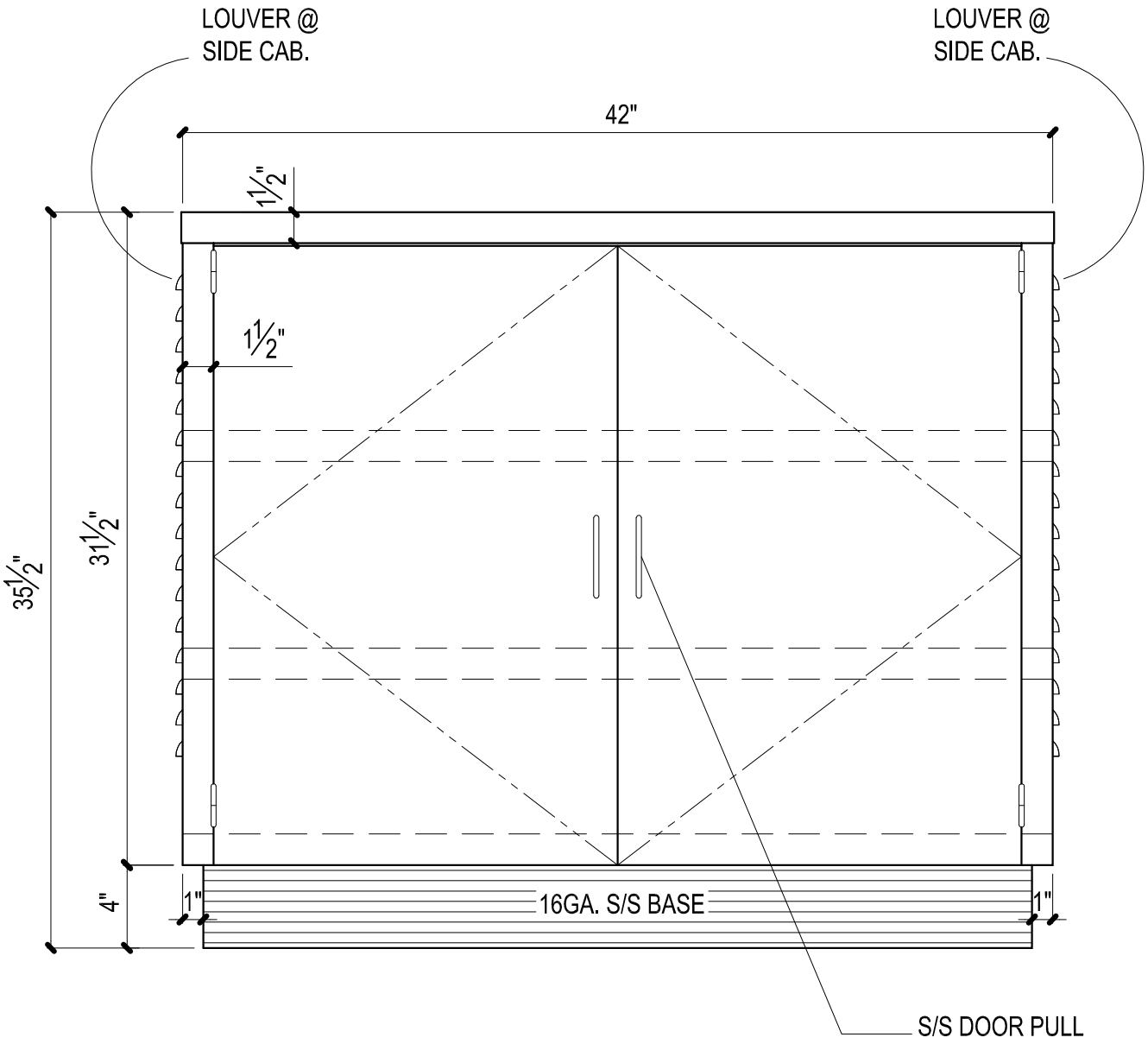


# FRONT VIEW CABINET

SCALE: 1-1/2"=1'-0"

*Performance Through Stainless!*

43 SOUTH LINDEN AVE. SOUTH SAN FRANCISCO, CA 94080 PH (650) 589-4231 FAX (650) 589-3981 WWW.STAPROUSA.COM

## S/S DETERGENT CABINET MOD: KP-SSDC

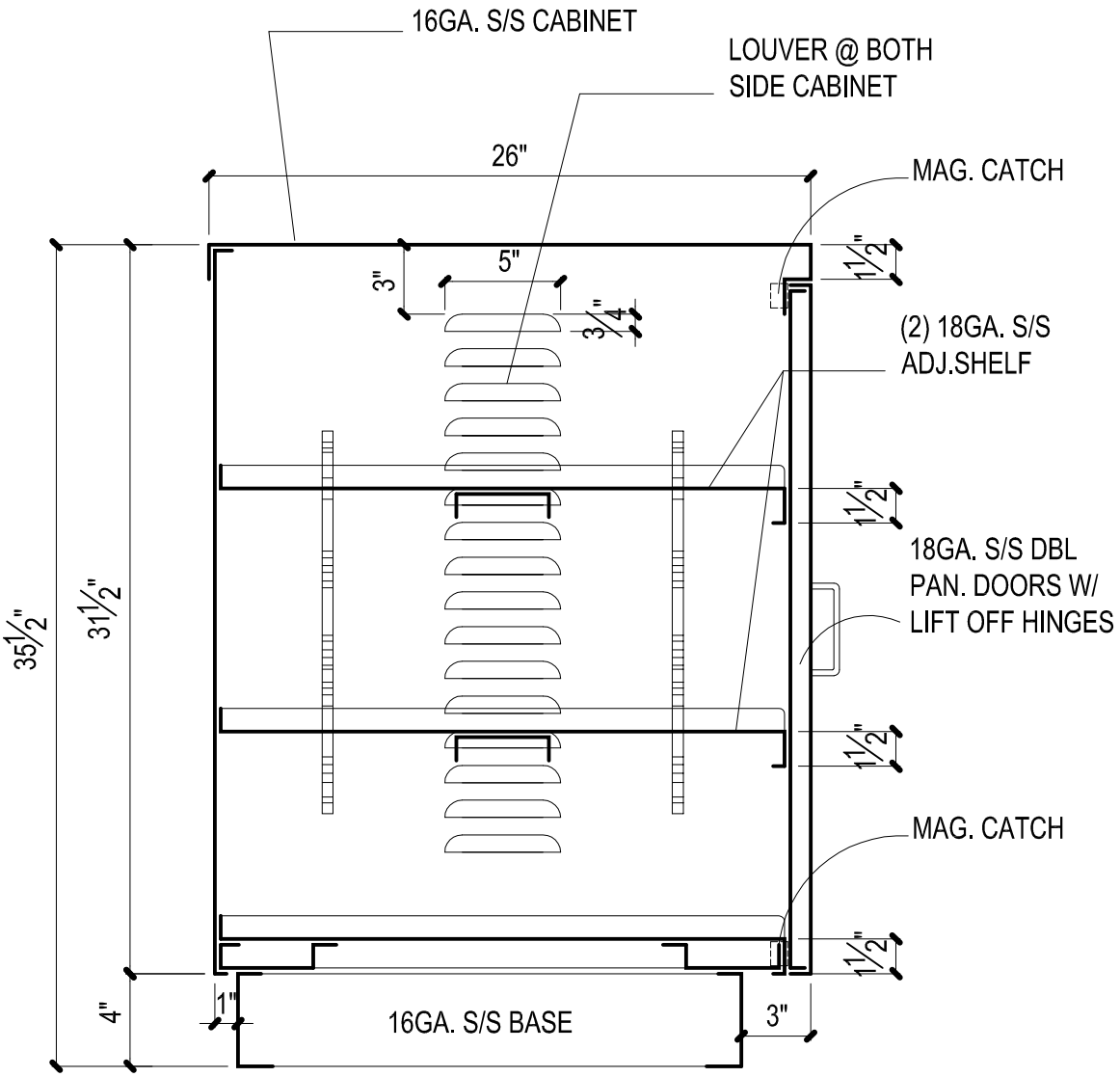


## SECTION

SCALE: 1-1/2"=1'-0"